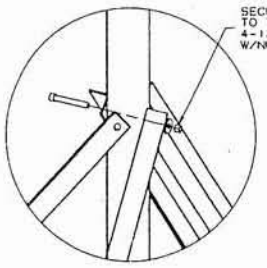

VIEW B

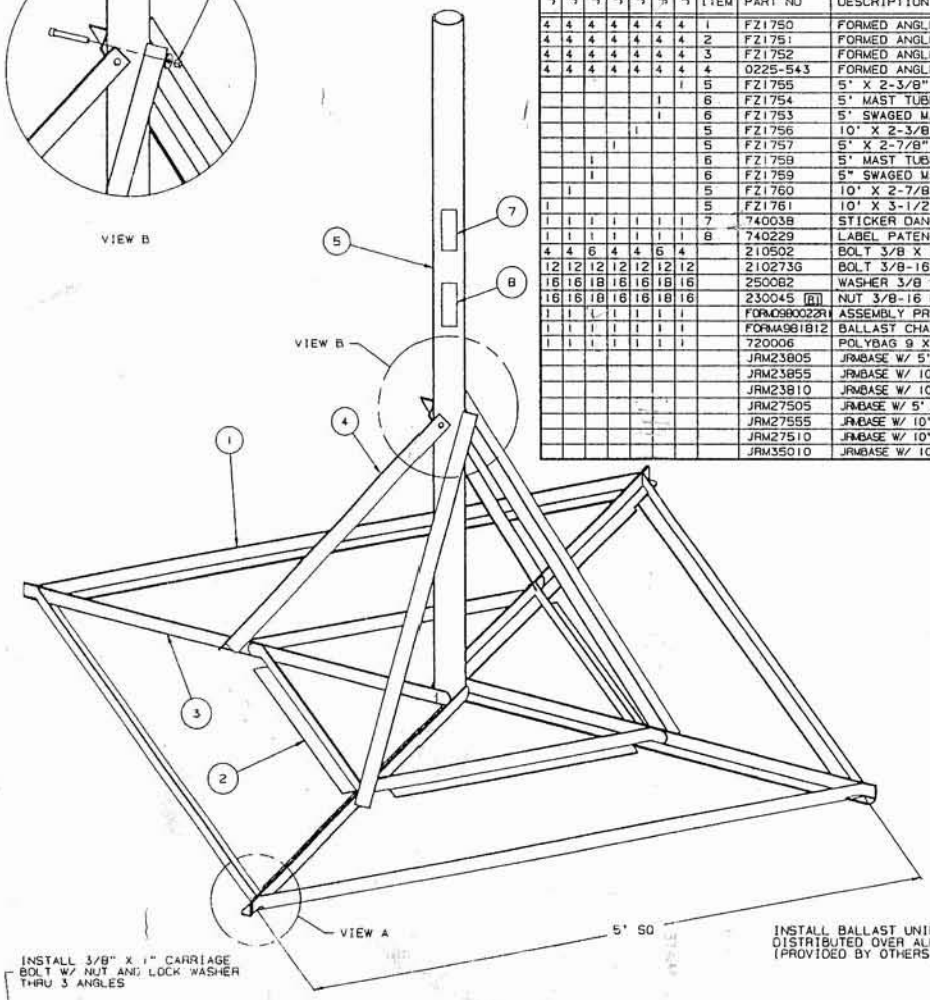

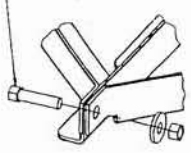

VIEW A

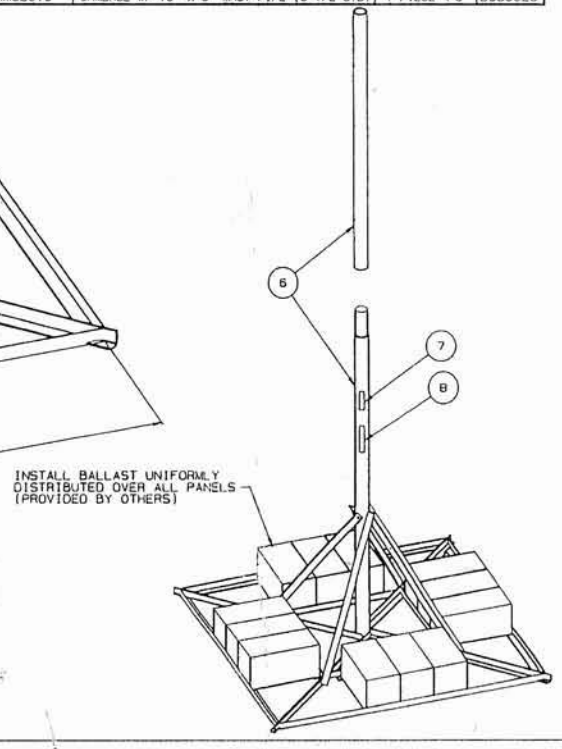

BILL OF MATERIAL

JRM35010	JRM27510	JRM27555	JRM27505	JRM23810	JRM23855	JRM23805	ITEM	PART NO	DESCRIPTION		DWG NO
4	4	4	4	4	4	4	1	FZ1750	FORMED ANGLE COMPONENT 62.29	PG	B980034
4	4	4	4	4	4	4	2	FZ1751	FORMED ANGLE COMPONENT 30.16	PG	B980035
4	4	4	4	4	4	4	3	FZ1752	FORMED ANGLE COMPONENT 44.28	PG	B980036
4	4	4	4	4	4	4	4	0225-543	FORMED ANGLE COMPONENT 37.10	PG	A950281
						1	5	FZ1755	5' X 2-3/8" MAST TUBE ASSY W/ HDW	PG	B980045
					1		6	FZ1754	5' MAST TUBE TOP SECTION	PG	B980041
					1		6	FZ1753	5' SWAGED MAST TUBE BOTTOM SECTION	PG	B980042
				1			5	FZ1756	10' X 2-3/8" MAST TUBE W/ HDW 1 PIECE	PG	B980046
			1				5	FZ1757	5' X 2-7/8" MAST TUBE ASSY W/ HDW	PG	B980047
		1					6	FZ1758	5' MAST TUBE TOP SECTION	PG	B980048
		1					6	FZ1759	5" SWAGED MAST TUBE BOTTOM SECTION	PG	B980049
	1						5	FZ1760	10' X 2-7/8" MAST TUBE W/ HDW 1 PIECE	PG	B980051
1							5	FZ1761	10' X 3-1/2" MAST TUBE ASSY W/ HDW 1 PIECE	PG	B980052
1	1	1	1	1	1	1	7	740038	STICKER DANGER WATCH WIRE		NO DWG
1	1	1	1	1	1	1	8	740229	LABEL PATENT #4649675		NO DWG
4	4	6	4	4	6	4		210502	BOLT 3/8 X 4-1/2 G5 HCS	HDG	PURCHASE
12	12	12	12	12	12	12		210273G	BOLT 3/8-16 X 1 CARRIAGE G5	HDG	PURCHASE
16	16	18	16	16	18	16		250082	WASHER 3/8 SPLIT LOCK	HDG	PURCHASE
16	16	18	16	16	18	16		230045 [A1]	NUT 3/8-16 HEX	HDG	PURCHASE
1	1	1	1	1	1	1		FORMD980022R1	ASSEMBLY PRINT DRAWING FOR JRM		D980022
1	1	1	1	1	1	1		FORMA981812	BALLAST CHART DRAWING		A981812
1	1	1	1	1	1	1		720006	POLYBAG 9 X 13 X 4 MIL		PURCHASE
								JRM23805	JRMBASE W/ 5' X 2" MAST PIPE (2-3/8 O.D.) 1 PIECE	PG	D980020
								JRM23855	JRMBASE W/ 10' X 2" MAST PIPE (2-3/8 O.D.) 2 PIECE	PG	D980020
								JRM23810	JRMBASE W/ 10' X 2" MAST PIPE (2-3/8 O.D.) 1 PIECE	PG	D980020
								JRM27505	JRMBASE W/ 5' X 2-1/2" MAST PIPE (2-7/8 O.D.) 1 PIECE	PG	D980020
								JRM27555	JRMBASE W/ 10' X 2-1/2" MAST PIPE (2-7/8 O.D.) 2 PIECE	PG	D980020
								JRM27510	JRMBASE W/ 10' X 2-1/2" MAST PIPE (2-7/8 O.D.) 1 PIECE	PG	D980020
								JRM35010	JRMBASE W/ 10' X 3" MAST PIPE (3-1/2 O.D.) 1 PIECE	PG	D980020

PRIOR TO INSTALLATION VERIFY THAT THE INSTALLATION, ROOF MATERIAL AND SUPPORTING STRUCTURE HAVE BEEN INVESTIGATED AND FOUND CAPABLE OF WITHSTANDING ALL LOADS IMPOSED BY THE PROPOSED ANTENNA SYSTEM. CONFIRM THAT THE SUPPORTING SURFACES, ANCHORS, AND/OR SAFETY CABLES, IF REQUIRED, HAVE BEEN FOUND TO BE ADEQUATE TO RESIST THE REACTIONS FROM THE ANTENNA SYSTEM AND THAT THE INSTALLATION WILL BE IN CONFORMANCE WITH ALL APPLICABLE LOCAL, STATE AND FEDERAL REQUIREMENTS.

ALL ANTENNA INSTALLATIONS MUST BE GROUNDED TO MEET APPLICABLE CODES.

ADEQUATE BALLAST MATERIAL MUST BE DETERMINED AND PROVIDED BY OTHERS TO PREVENT OVERTURNING AND SLIDING AT THE DESIGN WIND LOAD. SEE DRAWING A981812 FOR BALLAST AND ALLOWABLE ANTENNA AREAS INFORMATION

ROHN RECOMMENDS THAT BALLAST MATERIAL ALWAYS BE PLACED PRIOR TO MOUNTING THE ANTENNA AND THAT ROOF PADS AND MOUNT BE SECURED TO PREVENT HAZARDS FROM OCCURRING UNDER EXTREME WIND LOADING CONDITIONS. PRECAUTIONS SHOULD ALWAYS BE TAKEN TO PREVENT THE INADVERTENT REMOVAL OF BALLAST MATERIAL AFTER INSTALLATION AND TO INSURE THAT BALLAST MATERIAL IS FULLY SUPPORTED BY THE BALLAST

WHEN ADHESIVES, SEALANTS OR PADS ARE UTILIZED, THEY MUST BE COMPATIBLE WITH THE SUPPORTING SURFACE. THEY MUST ALSO BE DURABLE AND HAVE ADEQUATE STRENGTH. PRECAUTIONS SHOULD ALSO BE TAKEN TO INSURE THAT DAMAGE TO THE SUPPORTING SURFACE WILL NOT OCCUR UPON WIND LOADING.

SAFETY CABLE KITS CONSISTING OF A 3/16 EHS SAFETY CABLE (3990 LBS. ULTIMATE STRENGTH) WITH SIX CLAMPS TO SECURE MOUNT AND/OR BALLAST ARE AVAILABLE AS AN OPTION. USE THREE CABLE CLAMPS AT EACH END CONNECTION WITH THE U-BOLT ON THE DEAD END OF THE CABLE.

SAFETY CABLE LENGTH	PART NO
50 FT	SCK50
100 FT	SCK100
150 FT	SCK150

ROOF PADS OR MATS ARE AVAILABLE AS AN OPTION,
PART NUMBERS: JRMPAD & JRMMAT
HIGH STRENGTH BOLTS ARE PROVIDED. NUT LOCKING IS DEPENDENT UPON INITIAL TENSION IN BOLT. INSPECT MOUNT, ANTENNA AND TIGHTNESS OF NUTS AT SIX MONTH MAXIMUM INTERVALS

ROHN. *INDUSTRIES*
FRANKFORT, INDIANA 46041

Title
JRM BALLAST ROOF MOUNT

Scale: NONE
Drawn by: BEL — Date: 6-8-98
Checked by: WD — Date: 7-23-98
Approved by Engineering — Date
Approved by Production: BK/SK — Date: 8-5-98
Approved by Sales: DL — Date: 7-21-98
Drawing Type: 1

Unless otherwise specified, dimensions are given in inches. Tolerances are as noted

Material | Finish | Weight

This drawing is the property of ROHN. It is not to be reproduced, copied or traced in part without our written consent.

File Number: EF44380L
Drawing Number: D980022R1